SCARA ROBOT

TOSHIBA MACHINE

⚠ Safety warnings

- Before using, read through and completely understand the appropriate instruction manuals.
- The contents of this catalog may be subject to change without prior notice.

Distributor

ELMOTEC Automation | Löttechnik

SM13066-3000-EI
Printed in Japan

SCARA ROBOT

THL SERIES

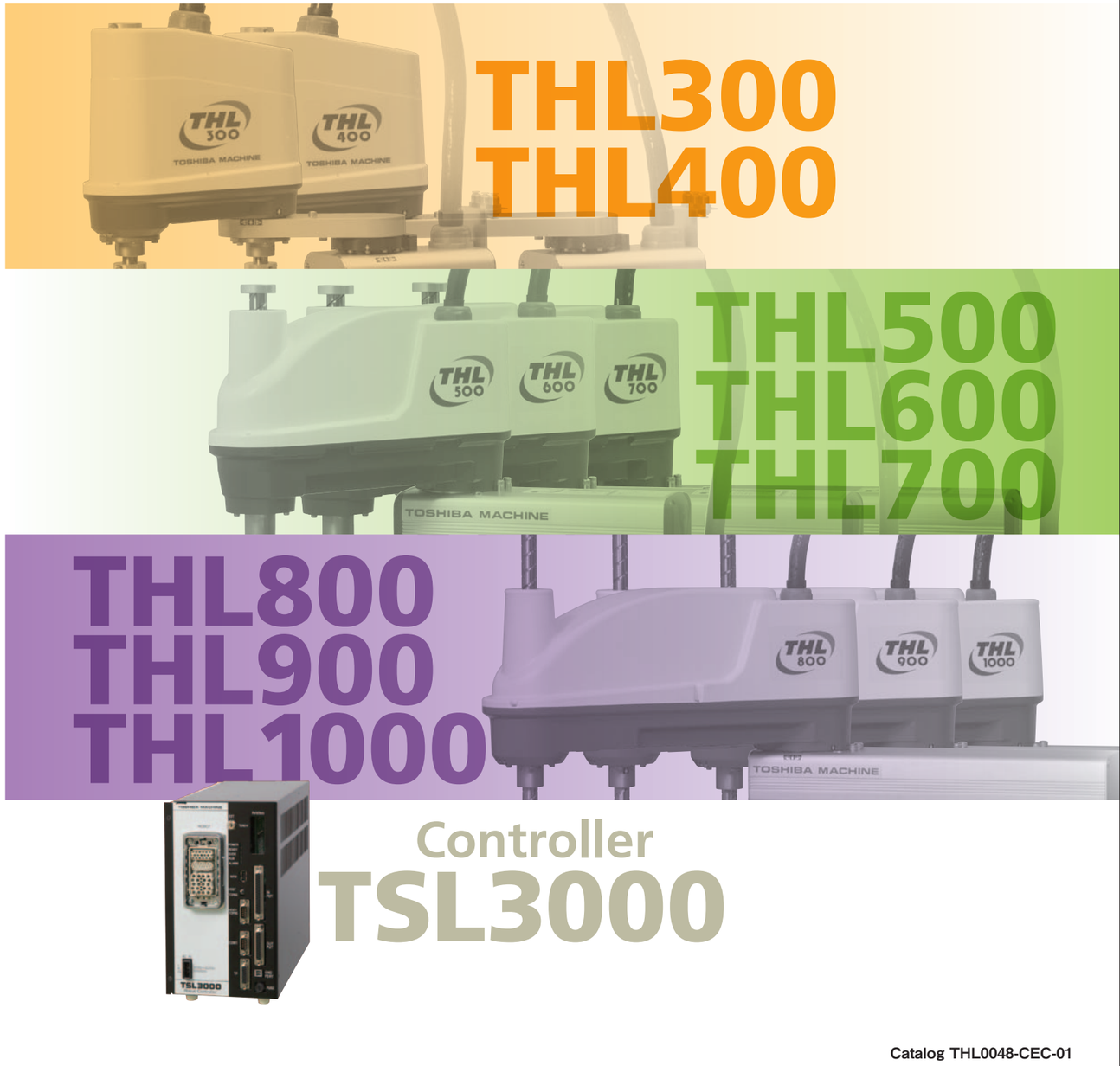

Catalog THL0048-CEC-01

Achieving Reliable Quality and Superior Performance

SCARA ROBOT THL Series

Low cost

Impressive performance at affordable prices.

Light-weight

Maximum weight reduction of about 60% has been achieved in comparison with our current. Models Capable of reducing environmental impact.

Energy-efficient

Maximum power consumption reduction of about 70% has been achieved in comparison with our current models. Low-power consumption robots ideal for energy conservation era.

Examples of Application and Adoption

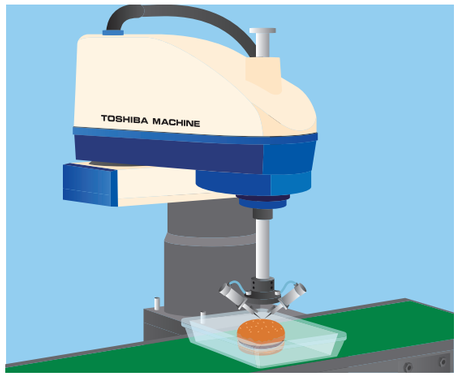

Food Manufacturing

Used for food manufacturing lines to prepare and transport food.

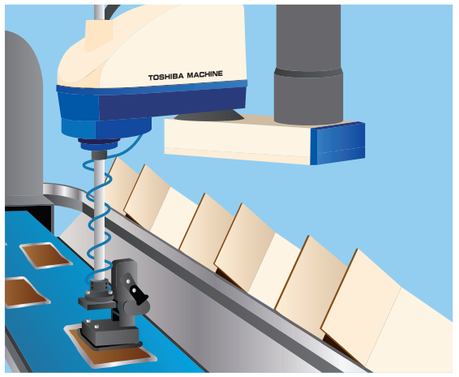

Food

Used for food boxing lines to automatically box ready-packed food being transported on the belt conveyor into boxes.

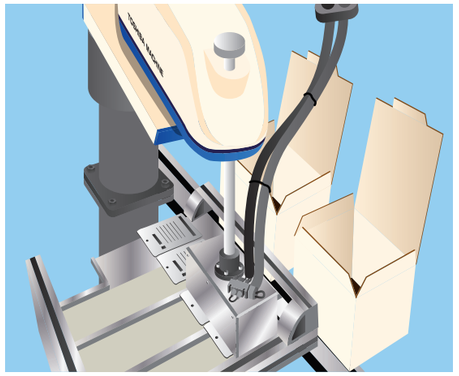

Pharmaceutical and Medical

Used for boxing lines of pharmaceutical and medical products to automatically box finished products being transported on the belt conveyor into boxes.

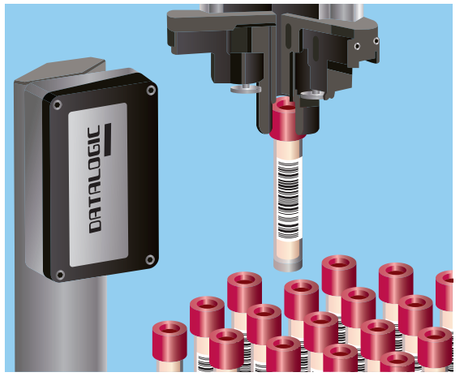

Medical Examination

Used to automate the processing of a large quantity of specimen samples at medical institutions. Test tubes picked up by the SCARA robot are read by a barcode reader, allowing uniform work and secure repeatability.

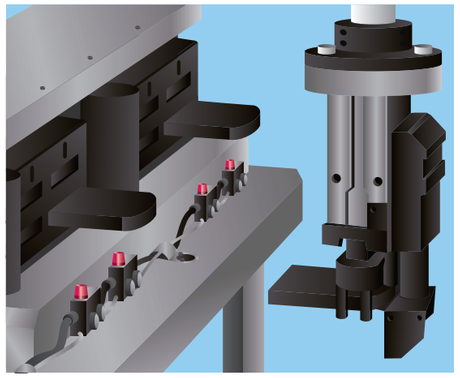

Assembling and Inspection

Used to assemble and inspect electronic devices. The SCARA robot has been adopted for manufacturing of precision machines.

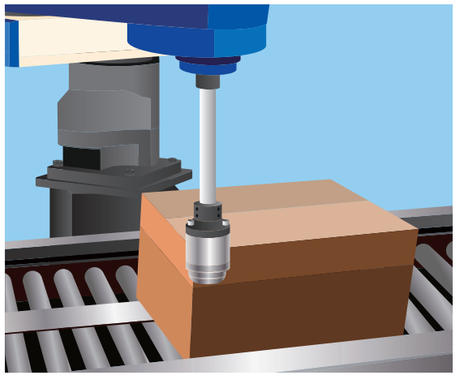

Cutting

Used as a cutting device. Cardboard boxes being transported by the conveyor are cut by the cutter attached to the SCARA robot.

Diverse Lineup to Meet Your Application Needs

THL300
p.08

THL400
p.09

THL500
p.10

THL600
p.11

THL700
p.12

THL800
p.13

THL900
p.14

THL1000
p.15

Model		THL300	THL400
Type		Horizontal multi-joint	Horizontal multi-joint
No. of controlled axes		4	4
Arm length		300mm (125mm+175mm)	400mm (225mm+175mm)
Working envelope	Axis 1	±125°	±125°
	Axis 2	±145°	±145°
	Axis 3 (Z axis)	0～160mm	0～160mm
	Axis 4 (Z-axis rotation)	±360°	±360°
Maximum speed*1	Axis 1	660°/s	660°/s
	Axis 2	660°/s	660°/s
	Axis 3 (Z axis)	1120mm/s	1120mm/s
	Axis 4 (Z-axis rotation)	1500°/s	1500°/s
	Composite	5.1m/s	6.3m/s
Standard cycle time (with 2 kg load)*2		0.48s	0.47s
Maximum payload mass		5kg (rated: 2 kg)	5kg (rated: 2 kg)
Allowable moment of inertia		0.05kg·m²	0.05kg·m²
Positioning repeatability*3	X-Y	±0.01mm	±0.01mm
	Z (Axis 3)	±0.015mm	±0.015mm
	Axis θ (Z-axis rotation)	±0.007°	±0.007°
Hand wiring		8 inputs / 8 outputs	8 inputs / 8 outputs
Hand pneumatic joints*4		φ6 x 3 pcs.	φ6 x 3 pcs.
Position detection		Absolute	Absolute
Robot controller cable		3.5m	3.5m
Power capacity		0.7kVA	0.7 k VA
Mass		12kg	13kg

Order model code

THL400-Z-C-S

- 400 — Arm length
- Z — Z-axis long stroke
- C — Optional specifications
- S — Special design

With cap : C
With protective bellows : B
Ceiling-mount type : T

Model		THL500	THL600	THL700
Type		Horizontal multi-joint	Horizontal multi-joint	Horizontal multi-joint
No. of controlled axes		4	4	4
Arm length		500mm (200mm+300mm)	600mm (300mm+300mm)	700mm (400mm+300mm)
Working envelope	Axis 1	±125°	±125°	±125°
	Axis 2	±145°	±145°	±145°
	Axis 3 (Z axis)	0～150mm	0～150mm	0～150mm
	Axis 4 (Z-axis rotation)	±360°	±360°	±360°
Maximum speed*1	Axis 1	450°/s	450°/s	450°/s
	Axis 2	450°/s	450°/s	450°/s
	Axis 3 (Z axis)	2000mm/s	2000mm/s	2000mm/s
	Axis 4 (Z-axis rotation)	1700°/s	1700°/s	1700°/s
	Composite	6.3m/s	7.1m/s	7.9m/s
Standard cycle time (with 2 kg load)*2		0.45s	0.45s	0.50s
Maximum payload mass		10 kg (rated: 2 kg)	10kg (rated: 2 kg)	10kg (rated: 2 kg)
Allowable moment of inertia		0.2kg·m²	0.2kg·m²	0.2kg·m²
Positioning repeatability*3	X-Y	±0.01mm	±0.01mm	±0.01mm
	Z (Axis 3)	±0.015mm	±0.015mm	±0.015mm
	Axis θ (Z-axis rotation)	±0.007°	±0.007°	±0.007°
Hand wiring		8 inputs / 8 outputs	8 inputs / 8 outputs	8 inputs / 8 outputs
Hand pneumatic joints*4		φ6 x 3 pcs.	φ6 x 3 pcs.	φ6 x 3 pcs.
Position detection		Absolute	Absolute	Absolute
Robot controller cable		3.5m	3.5m	3.5m
Power capacity		1.4kVA	1.4kVA	1.4kVA
Mass		22kg	23kg	24kg

Model		THL800	THL900	THL1000
Type		Horizontal multi-joint	Horizontal multi-joint	Horizontal multi-joint
No. of controlled axes		4	4	4
Arm length		800mm (350mm+450mm)	900mm (450mm+450mm)	1000mm (550mm+450mm)
Working envelope	Axis 1	±125°	±125°	±125°
	Axis 2	±145°	±145°	±145°
	Axis 3 (Z axis)	0～300mm	0～300mm	0～300mm
	Axis 4 (Z-axis rotation)	±360°	±360°	±360°
Maximum speed*1	Axis 1	187.5°/s	187.5°/s	187.5°/s
	Axis 2	217.5°/s	217.5°/s	217.5°/s
	Axis 3 (Z axis)	2000mm/s	2000mm/s	2000mm/s
	Axis 4 (Z-axis rotation)	1700°/s	1700°/s	1700°/s
	Composite	4.3m/s	4.6m/s	5.0m/s
Standard cycle time (with 2 kg load)*2		0.47s	0.48s	0.48s
Maximum payload mass		10kg (rated: 2 kg)	10kg (rated: 2 kg)	10kg (rated: 2 kg)
Allowable moment of inertia		0.2kg·m²	0.2kg·m²	0.2kg·m²
Positioning repeatability*3	X-Y	±0.02mm	±0.02mm	±0.02mm
	Z (Axis 3)	±0.015mm	±0.015mm	±0.015mm
	Axis θ (Z-axis rotation)	±0.007°	±0.007°	±0.007°
Hand wiring		8 inputs / 8 outputs	8 inputs / 8 outputs	8 inputs / 8 outputs
Hand pneumatic joints*4		φ6 x 3 pcs.	φ6 x 3 pcs.	φ6 x 3 pcs.
Position detection		Absolute	Absolute	Absolute
Robot controller cable		3.5m	3.5m	3.5m
Power capacity		1.4kVA	1.4kVA	1.4kVA
Mass		33kg	35kg	37kg

*1: Acceleration/deceleration rates may be limited according to the motion pattern, load mass and amount of offset.
*2: Horizontal 300 mm, vertical 25 mm, round-trip. Continuous operation is not possible beyond the effective load ratio.
*3: When the environmental temperature is constant 20°C. Positioning repeatable accuracy in one-direction movement. Not absolute positioning accuracy.
*4: Pneumatic joints are provided on the base. Please refer to the drawings for the details of the pneumatic joints. Pipes are to be provided by the customers.

TSL3000 Controller

- 4-axis control specification
- Space saving and lightweight compared to the TS controllers for the TH-A Series.
- Ethernet is equipped as standard, and expansions of I/O and various networks are supported.
- The controller's operation status is indicated by LED display.
- Programs can be backed up easily to USB memory.

TSL3000

Teaching Pendant
(Option)
TP1000

Model	TSL3000
No. of Control Axes	Maximum 4 axes
Motion Modes	PTP, CP(Continuous Path ; Linear, Circular),Short-Cut, Arch Motion
Storage Capacity	Approx. Total: 6400 point + 12800 steps 1 program : 2000 point + 3000 steps
No. of Registrable Programs	Maximum 256
Programming Language	SCOL(similar to BASIC)
Teaching Unit (Option)	Teach pendant TP1000 (Cable length 5m, 3-point enable switch)
External I/O Signals	8 inputs / 8 outputs(plus or minus common selectable)
Hand Control Signals	8 input points/8 output points
External Operation Signals	Input : cycle operation mode, start, stop. (13 signals) output : Servo ON, emergency stop, etc. (10 signals)
Serial Communication Port	RS232C: 2 ports
Other Functions	Torque control, Interruptive functions, self-diagnosis, I/O control and communications during motion, Coordinate calculations, Built-in PLC, etc.
Power Supply	Single phase AC190~240V , 50/60Hz(±1Hz)
Outer Dimensions and Mass	150 (W) x 266 (H) x 304 (D) [mm], 7kg
PC Software for Programming Support (Option)	TSPC : Program editor, teaching, remote operation, etc.
Option	I/O extension, Field-network (CC-Link, Devive-Net, PROFIBUS) *5

*5: CC-Link is a registered trademark of CC-Link Partner Association.
DeviceNet is registered trademark of ODVA.
PROFIBUS is a registered trademark of Profibus User Organization.

External view

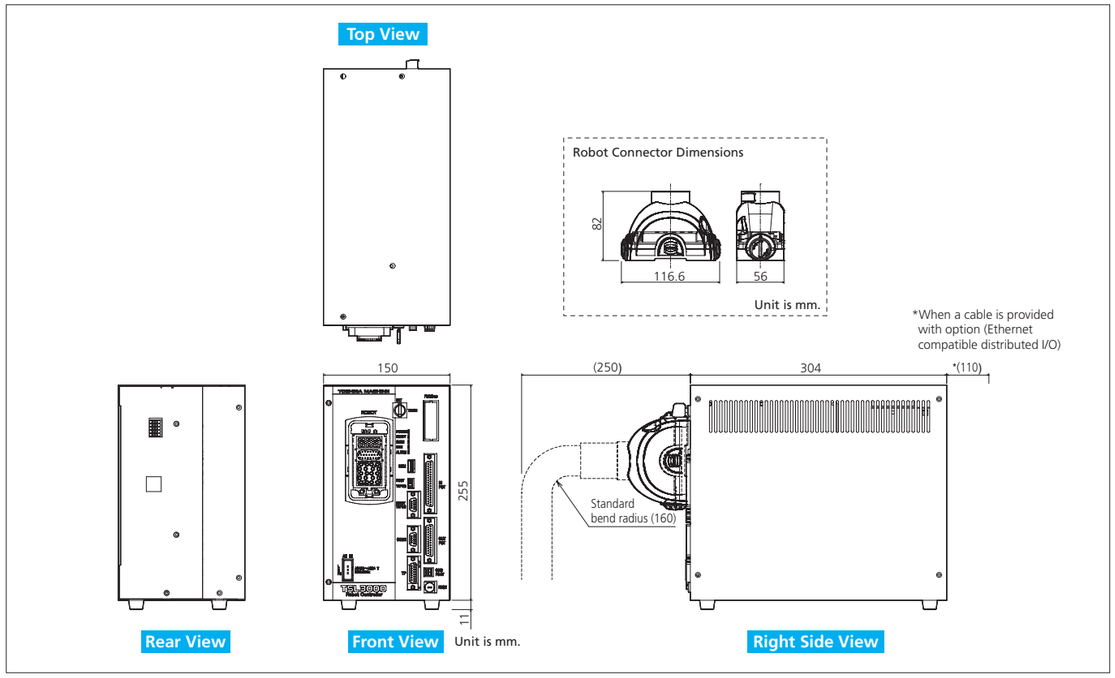

High-Performance Teach Pendant TP3000 (Option)

New sensation. Equipped with graphic operation keys.
This teaching pendant has both high visibility and superb operability.

TP3000

*This product is an optional product.

Color LCD Display

Employs a highly visible clear color LCD display

By employing a color LCD display, expressiveness has been improved remarkably in comparison to the existing teach pendant (TP1000).

Equipped with a word association function

Word input candidates are displayed according to the character(s) input by the user. Reserved words can be input more quickly than the conventional teach pendant (TP1000).

Supports IP65

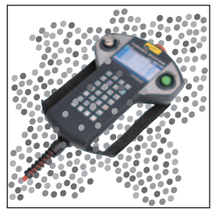

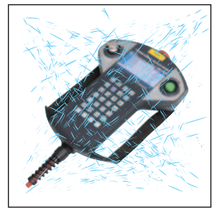

*These pictures show images, not actual product appearances.

Note: The controller's main unit and the periphery of the connector do not support IP.

Equipped with graphic operation keys

The keyboard display changes dynamically according to the screen display. Because the required keys are displayed at the required time, the TP3000 reduces the cumbersomeness of key input conventionally required for small teaching pendants.

Outlining function

The TP3000 displays the main program, subprograms, and labels in the SCOL program hierarchically, enabling quick verification of the program configuration.

What is IP65?

IP□□ (Secondary property level)
(Primary property level)

IP (International Protection) refers to a protection level against external solids (rubbish and dust) and water. The primary property level indicates the details of protection against external solids (rubbish and dust). Level "6" refers to "dust-proof type", which means "dust particles do not enter inside."
The secondary property level indicates the details of protection against water. Level "5" refers to "protection against jet stream water", which means "not adversely affected by direct jet stream of water from any direction".

SCARA ROBOT THL300

Model		THL300
Type		Horizontal multi-joint
No. of controlled axes		4
Arm length		300mm (125mm+175mm)
Working envelope	Axis 1	±125°
	Axis 2	±145°
	Axis 3 (Z axis)	0～160mm
	Axis 4 (Z-axis rotation)	±360°
Maximum speed*1	Axis 1	660°/s
	Axis 2	660°/s
	Axis 3 (Z axis)	1120mm/s
	Axis 4 (Z-axis rotation)	1500°/s
	Composite	5.1m/s
Standard cycle time (with 2 kg load)*2		0.48s
Maximum payload mass		5kg (rated: 2kg)
Allowable moment of inertia		0.05kg·m²
Positioning repeatability*3	X-Y	±0.01mm
	Z (Axis 3)	±0.015mm
	Axis θ (Z-axis rotation)	±0.007°
Hand wiring		8 inputs / 8 outputs
Hand pneumatic joints*4		φ4 x 3 pcs.
Position detection		Absolute
Robot controller cable		3.5m
Power capacity		0.7kVA
Mass		12kg

■For *1 to *4, please see page 5.

External view

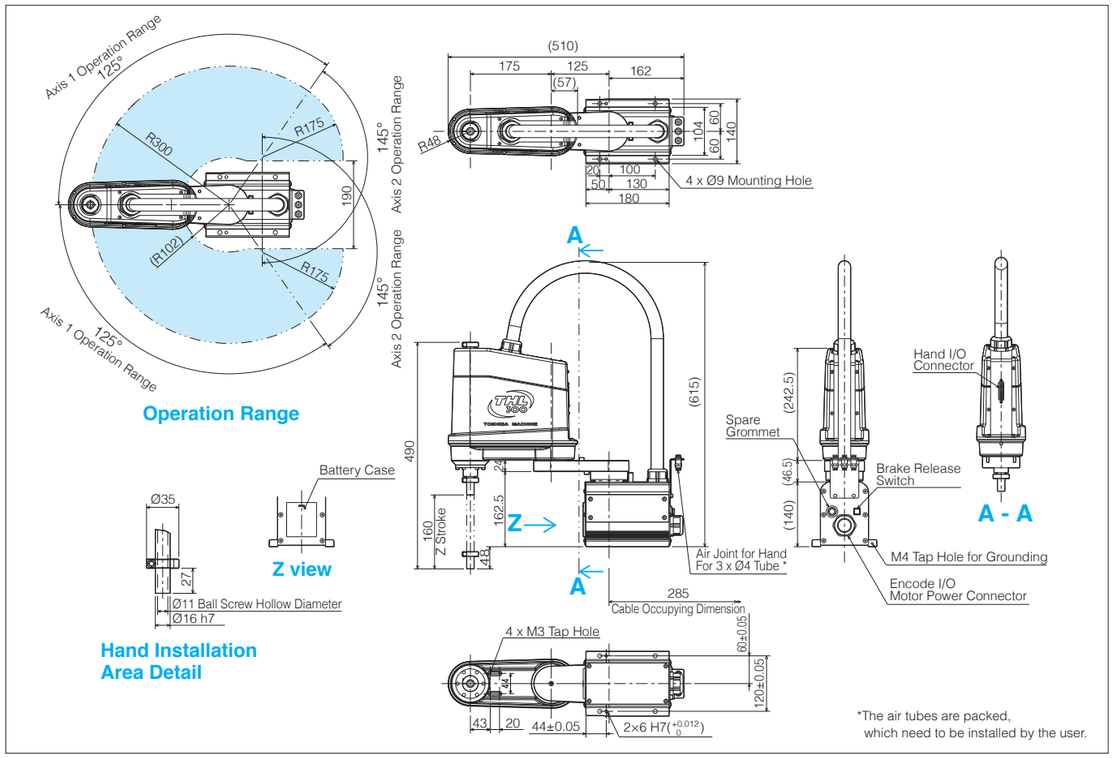

*The air tubes are packed, which need to be installed by the user.

SCARA ROBOT THL400

Model		THL400
Type		Horizontal multi-joint
No. of controlled axes		4
Arm length		400mm (225mm+175mm)
Working envelope	Axis 1	±125°
	Axis 2	±145°
	Axis 3 (Z axis)	0～160mm
	Axis 4 (Z-axis rotation)	±360°
Maximum speed*1	Axis 1	660°/s
	Axis 2	660°/s
	Axis 3 (Z axis)	1120mm/s
	Axis 4 (Z-axis rotation)	1500°/s
	Composite	6.3m/s
Standard cycle time (with 2 kg load)*2		0.47s
Maximum payload mass		5kg (rated: 2kg)
Allowable moment of inertia		0.05kg·m²
Positioning repeatability*3	X-Y	±0.01mm
	Z (Axis 3)	±0.015mm
	Axis θ (Z-axis rotation)	±0.007°
Hand wiring		8 inputs / 8 outputs
Hand pneumatic joints*4		φ4 x 3 pcs.
Position detection		Absolute
Robot controller cable		3.5m
Power capacity		0.7kVA
Mass		13kg

■For *1 to *4, please see page 5.

External view

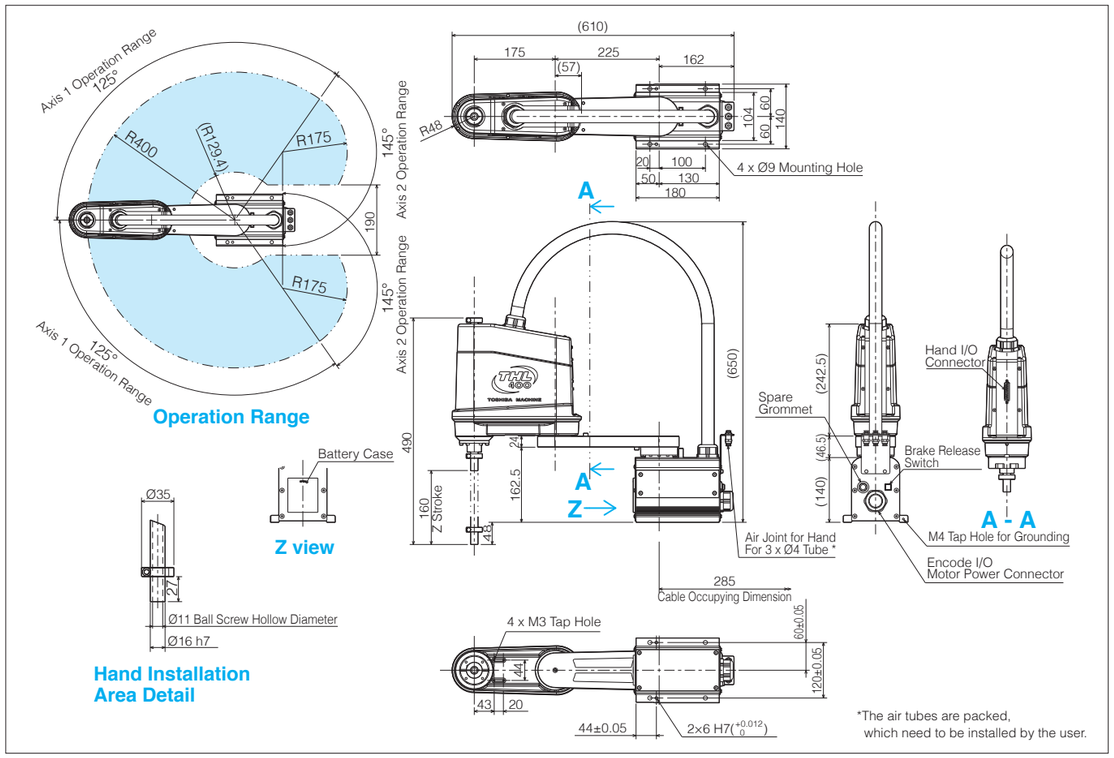

*The air tubes are packed, which need to be installed by the user.

SCARA ROBOT THL500

Model		THL500
Type		Horizontal multi-joint
No. of controlled axes		4
Arm length		500mm (200mm+300mm)
Working envelope	Axis 1	±125°
	Axis 2	±145°
	Axis 3 (Z axis)	0～150mm
	Axis 4 (Z-axis rotation)	±360°
Maximum speed*1	Axis 1	450°/s
	Axis 2	450°/s
	Axis 3 (Z axis)	2000mm/s
	Axis 4 (Z-axis rotation)	1700°/s
	Composite	6.3m/s
Standard cycle time (with 2 kg load)*2		0.45s
Maximum payload mass		10kg (rated: 2kg)
Allowable moment of inertia		0.2kg·㎡
Positioning repeatability*3	X-Y	±0.01mm
	Z (Axis 3)	±0.015mm
	Axis θ (Z-axis rotation)	±0.007°
Hand wiring		8 inputs / 8 outputs
Hand pneumatic joints*4		φ6 x 3 pcs.
Position detection		Absolute
Robot controller cable		3.5m
Power capacity		1.4kVA
Mass		22kg

■For *1 to *4, please see page 5.

External view

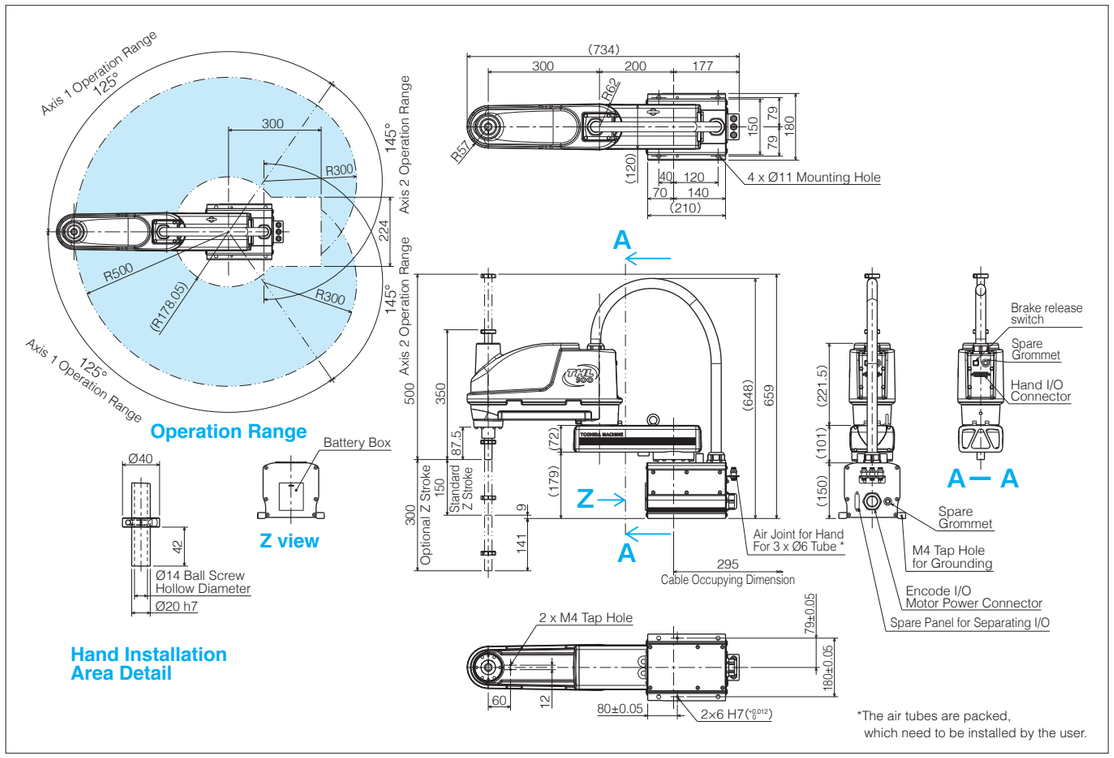

*The air tubes are packed, which need to be installed by the user.

SCARA ROBOT THL600

Model		THL600
Type		Horizontal multi-joint
No. of controlled axes		4
Arm length		600mm (300mm+300mm)
Working envelope	Axis 1	±125°
	Axis 2	±145°
	Axis 3 (Z axis)	0～150mm
	Axis 4 (Z-axis rotation)	±360°
Maximum speed*1	Axis 1	450°/s
	Axis 2	450°/s
	Axis 3 (Z axis)	2000mm/s
	Axis 4 (Z-axis rotation)	1700°/s
	Composite	7.1m/s
Standard cycle time (with 2 kg load)*2		0.45s
Maximum payload mass		10kg (rated: 2kg)
Allowable moment of inertia		0.2kg·㎡
Positioning repeatability*3	X-Y	±0.01mm
	Z (Axis 3)	±0.015mm
	Axis θ (Z-axis rotation)	±0.007°
Hand wiring		8 inputs / 8 outputs
Hand pneumatic joints*4		φ6 x 3 pcs.
Position detection		Absolute
Robot controller cable		3.5m
Power capacity		1.4kVA
Mass		23kg

■For *1 to *4, please see page 5.

External view

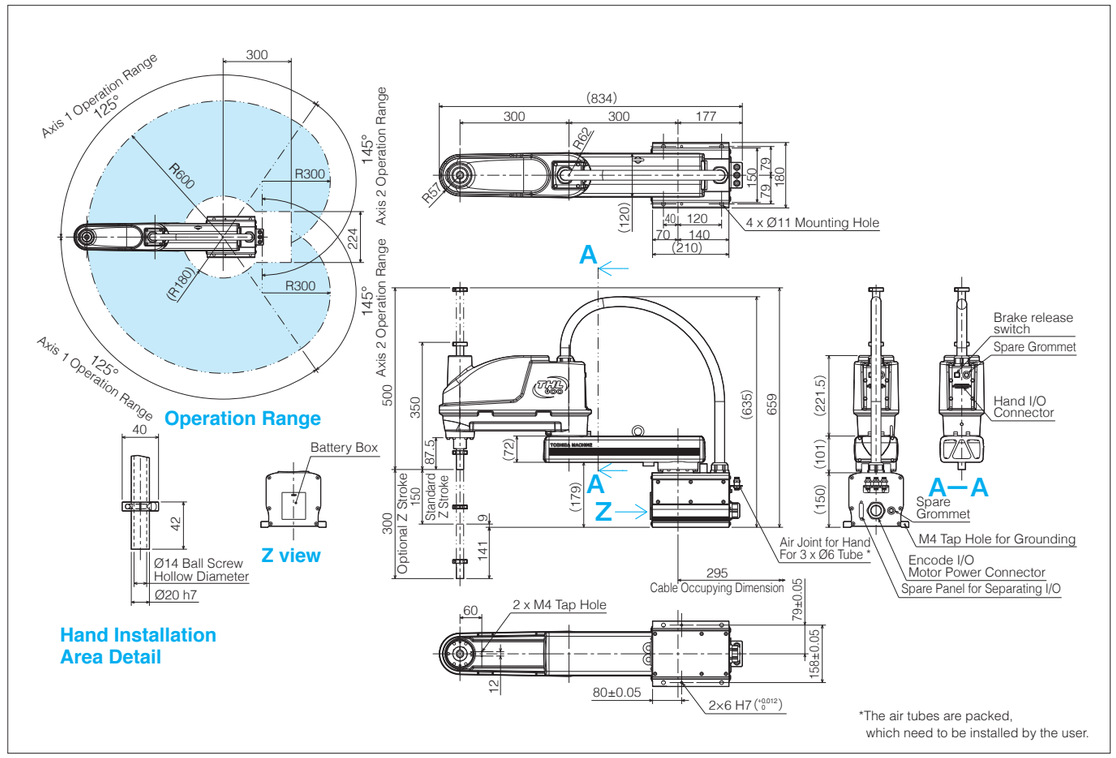

*The air tubes are packed, which need to be installed by the user.

SCARA ROBOT THL700

Model		THL700
Type		Horizontal multi-joint
No. of controlled axes		4
Arm length		700mm (400mm+300mm)
Working envelope	Axis 1	±125°
	Axis 2	±145°
	Axis 3 (Z axis)	0～150mm
	Axis 4 (Z-axis rotation)	±360°
Maximum speed*1	Axis 1	450°/s
	Axis 2	450°/s
	Axis 3 (Z axis)	2000mm/s
	Axis 4 (Z-axis rotation)	1700°/s
	Composite	7.9m/s
Standard cycle time (with 2 kg load)*2		0.50s
Maximum payload mass		10kg (rated: 2kg)
Allowable moment of inertia		0.2kg·㎡
Positioning repeatability*3	X-Y	±0.01mm
	Z (Axis 3)	±0.015mm
	Axis θ (Z-axis rotation)	±0.007°
Hand wiring		8 inputs / 8 outputs
Hand pneumatic joints*4		φ6 x 3 pcs.
Position detection		Absolute
Robot controller cable		3.5m
Power capacity		1.4kVA
Mass		24kg

■For *1 to *4, please see page 5.

External view

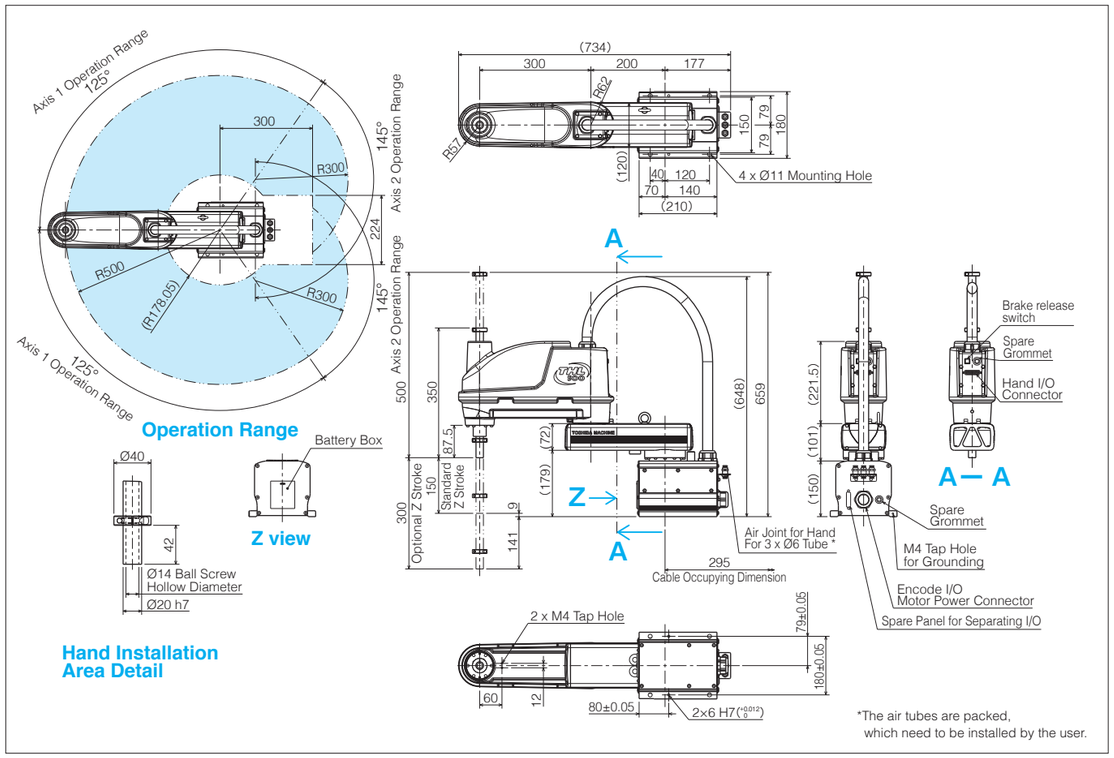

*The air tubes are packed, which need to be installed by the user.

SCARA ROBOT THL800

Model		THL800
Type		Horizontal multi-joint
No. of controlled axes		4
Arm length		800mm (350mm+450mm)
Working envelope	Axis 1	±125°
	Axis 2	±145°
	Axis 3 (Z axis)	0～300mm
	Axis 4 (Z-axis rotation)	±360°
Maximum speed*1	Axis 1	187.5°/s
	Axis 2	217.5°/s
	Axis 3 (Z axis)	2000mm/s
	Axis 4 (Z-axis rotation)	1700°/s
	Composite	4.3m/s
Standard cycle time (with 2 kg load)*2		0.47s
Maximum payload mass		10kg (rated: 2kg)
Allowable moment of inertia		0.2kg·㎡
Positioning repeatability*3	X-Y	±0.02mm
	Z (Axis 3)	±0.015mm
	Axis θ (Z-axis rotation)	±0.007°
Hand wiring		8 inputs / 8 outputs
Hand pneumatic joints*4		φ6 x 3 pcs.
Position detection		Absolute
Robot controller cable		3.5m
Power capacity		1.4kVA
Mass		33kg

■For *1 to *4, please see page 5.

External view

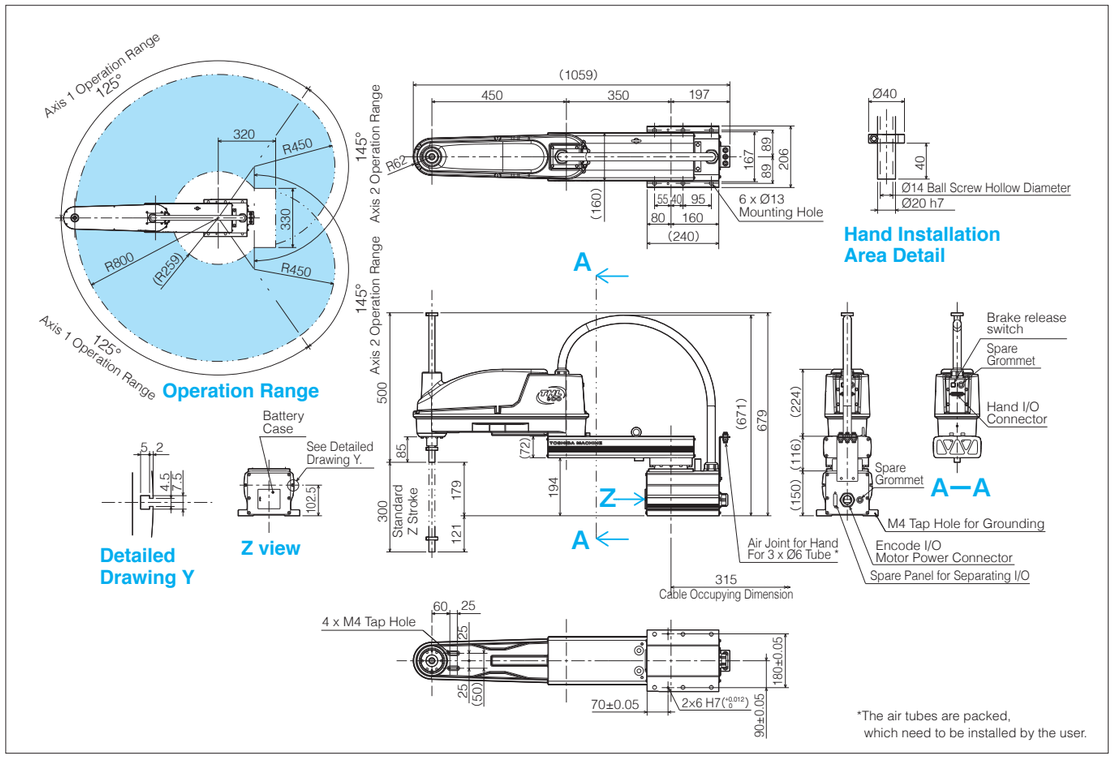

*The air tubes are packed, which need to be installed by the user.

SCARA ROBOT THL900

Model		THL900
Type		Horizontal multi-joint
No. of controlled axes		4
Arm length		900mm (450mm+450mm)
Working envelope	Axis 1	±125°
	Axis 2	±145°
	Axis 3 (Z axis)	0～300mm
	Axis 4 (Z-axis rotation)	±360°
Maximum speed*1	Axis 1	187.5°/s
	Axis 2	217.5°/s
	Axis 3 (Z axis)	2000mm/s
	Axis 4 (Z-axis rotation)	1700°/s
	Composite	4.6m/s
Standard cycle time (with 2 kg load)*2		0.48s
Maximum payload mass		10kg (rated: 2kg)
Allowable moment of inertia		0.2kg·㎡
Positioning repeatability*3	X-Y	±0.02mm
	Z (Axis 3)	±0.015mm
	Axis θ (Z-axis rotation)	±0.007°
Hand wiring		8 inputs / 8 outputs
Hand pneumatic joints*4		φ6 x 3 pcs.
Position detection		Absolute
Robot controller cable		3.5m
Power capacity		1.4kVA
Mass		35kg

■For *1 to *4, please see page 5.

External view

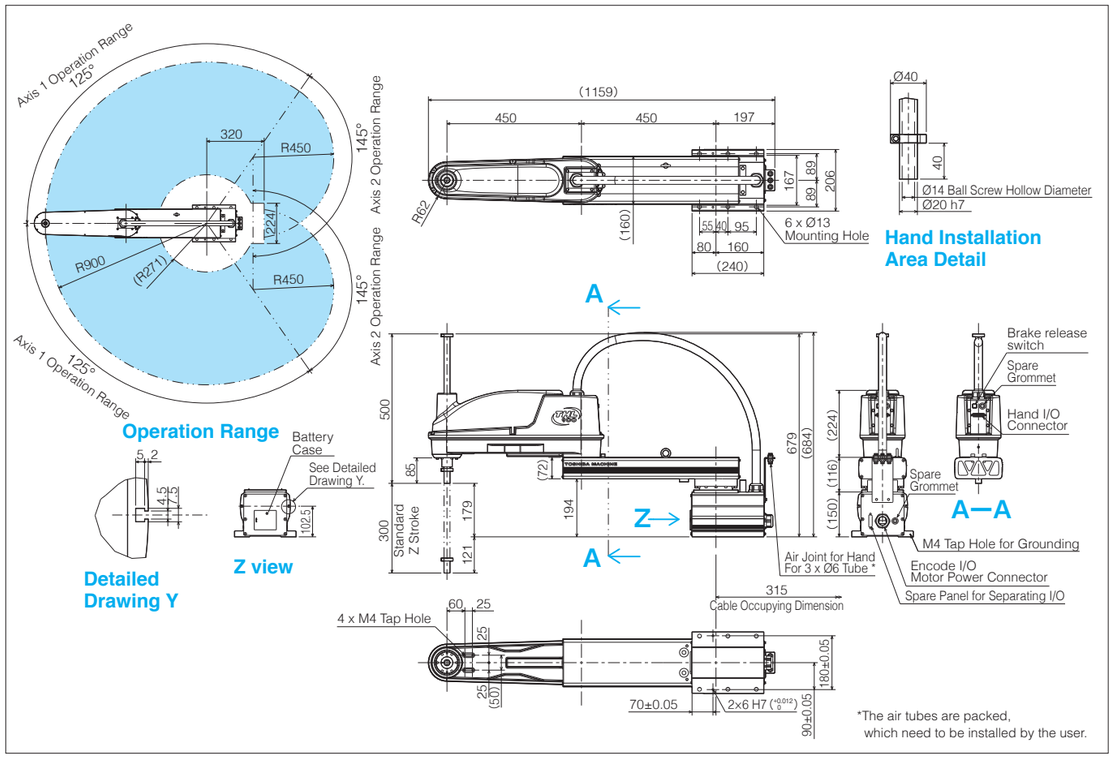

SCARA ROBOT THL1000

Model		THL1000
Type		Horizontal multi-joint
No. of controlled axes		4
Arm length		1000mm (550mm+450mm)
Working envelope	Axis 1	±125°
	Axis 2	±145°
	Axis 3 (Z axis)	0～300mm
	Axis 4 (Z-axis rotation)	±360°
Maximum speed*1	Axis 1	187.5°/s
	Axis 2	217.5°/s
	Axis 3 (Z axis)	2000mm/s
	Axis 4 (Z-axis rotation)	1700°/s
	Composite	5.0m/s
Standard cycle time (with 2 kg load)*2		0.48s
Maximum payload mass		10kg (rated: 2kg)
Allowable moment of inertia		0.2kg·㎡
Positioning repeatability*3	X-Y	±0.02mm
	Z (Axis 3)	±0.015mm
	Axis θ (Z-axis rotation)	±0.007°
Hand wiring		8 inputs / 8 outputs
Hand pneumatic joints*4		φ6 x 3 pcs.
Position detection		Absolute
Robot controller cable		3.5m
Power capacity		1.4kVA
Mass		37kg

■For *1 to *4, please see page 5.

External view

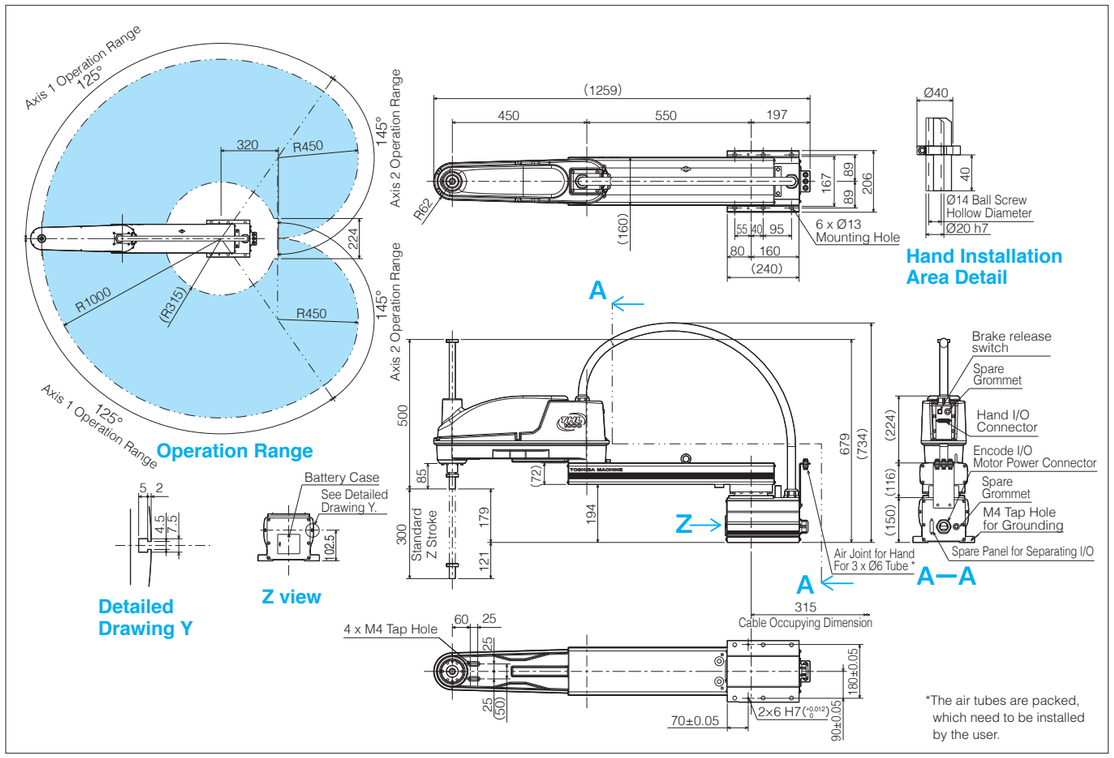

Options

These functional optional specifications are designed with consideration for applications, environment, and system-layout requirements.

Z-Axis Long Stroke (-Z)

Compatible Models: THL500, THL600, THL700

The Z-axis stroke range is extended.
Useful in an application with large up-down movements and handling of long workpieces.
(Note: If a stroke other than the above is desired, please contact us.)

Protective Belliows for Z-Axis (-B)

Compatible Models: THL500, THL600, THL700

Protection of the Z-axis shaft lower side in an environment where liquid or chips may scatter.
(Note: The cycle time and Z-axis stroke differ from the standard specifications. Please contact us for details.)

Z-Axis Cap (-C)

Compatible Models: THL500, THL600, THL700

Protection of the Z-axis shaft upper side in an environment where liquid or chips may scatter. It also prevents intrusion and jamming by cables and other peripheral items.

Ceiling-mount type (-T)

Compatible Models: THL400, THL500, THL600, THL700

To enable more freedom in system layout and effective use of a space, the robot is suspended from the upper side of the working area.
(Note: The working envelopes differ from the standard-type robots. Please contact us for details.)

Optional Cables Length

In all models of the THL Series SCARA robots, the length of the cable between a SCARA robot and its controller can be extended to a maximum of 15m.

Support of Safety Category 3

Compatible Models: THL300, THL400, THL500, THL600, THL700

The models can be equipped with optional unit TS3FB and by adding necessary safety design, thus conform to the safety category 3 that is required in the ANSI and CE marking.
*This option is supported when the TS3000 controller is used.

Tool Flange for End Effectors Mounting

Tool flange for securing the robot's hand is available.
This optional product can be used in all models of the THL Series.
*The photo right shows the hand mounting tool flange for the THL500 to THL1000 SCARA robots. The shape of the hand mounting tool flange for the THL300 and THL400 SCARA robots is different from the photo right.

Additional 5th Axis (Traveling axis, Wrist axis, etc.)

Compatible Models: THL500, THL600, THL700

5th axis can be added for such usage as wrist axis for workpiece flip-over or moving the robot on a traverse axis.
*This option is supported when the TS3000 controller is used.

Corresponding Option Table

The following shows a convenient corresponding option table. More options will continuously be supported!!

Option / Model Name	Z-Axis Long Stroke (-Z)	Protective Belliows for Z-Axis (-B)	Z-Axis Cap (-C)	Ceiling-mount type (-T)	Safety Category 3	Cable Extension (Max)	Dust and Splash-Proof (-IP)	Tool Flange for End Effectors Mounting	Additional 5th Axis (Traveling axis, Wrist axis, etc.)	Cleanroom Design (-CR, -CRB)
THL300	△	△	△	×	△	15m	×	○	△	×
THL400	△	△	△	○	△	15m	×	○	△	×
THL500	○(300mm)	○	○	○	○	15m	×	○	○ (Note)	×
THL600	○(300mm)	○	○	○	○	15m	×	○	○ (Note)	×
THL700	○(300mm)	○	○	○	○	15m	×	○	○ (Note)	×
THL800	△	△	△	△	△	15m	×	○	△	×
THL900	△	△	△	△	△	15m	×	○	△	×
THL1000	△	△	△	△	△	15m	×	○	△	×

○: Can be supported.
△: Please contact us.
×: When this option is selected, the TH-A Series is recommended.
(Note): Cannot be added as a wrist axis, but can be added as a travelling axis.

Functions and Applications

Support for Connection Device Samples

TOSHIBA MACHINE × Pro-face for the best interface

[Robot unit with touch panel]

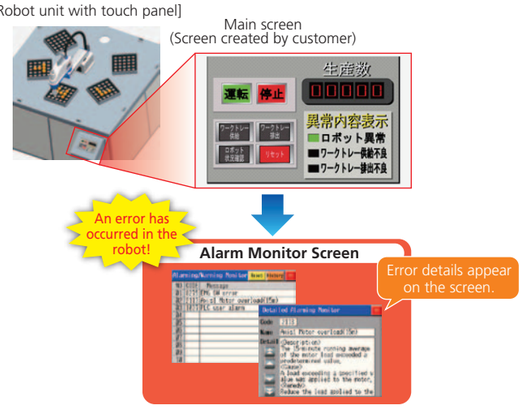

Connection Device Samples is a collaborative system between Toshiba Machine Co., Ltd. and Digital Electronics Corporation. It enables users to check the status of the robot on the touch panel display device.

[Features and advantages]

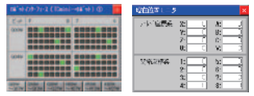

- When an error occurs in the robot, the error information or details can be checked on the Alarm Monitor Screen (see the left figure).
- Additionally, various other screens for functions including Robot I/O Monitor, Current Position Monitor, I/O Time Chart and Connected Device Data Transfer are provided.
- The above robot screens can be downloaded from the website of Digital Electronics Corporation free of charge. There is no need to create these screens and they can be used immediately after product purchase.
  http://www.proface.co.jp/otasuke/sample/download/common/connection_robot_con_ts_j.html
- The status of the robot can be checked even by people who cannot operate the teach pendant.
- Because the information about both the robot and the system is displayed on the same display device, troubleshooting is much easier.

*For product information about the touch panel that is compatible with this system, please contact Digital Electronics Corporation.
http://www.pro-face.com/otasuke/sample/detail/common/connection_robot_con_ts_e.html

Built-In PLC

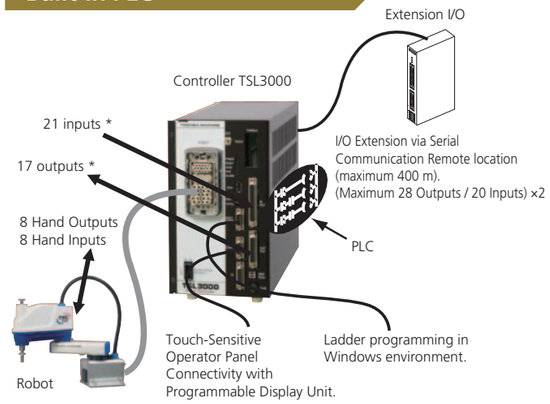

*Including system signals

The TSL3000 controller has a built-in simplified sequencer (TCmini). Input and output signals can be handled by ladder-style programming logic, independent from robot motion.

[Features and advantages]

- TCmini controls input/output signals of standard I/O, extension I/O and touch-sensitive panel by ladder program and exchanges data with robot program.
- Thus, flexible system design and control of peripheral equipment is possible without the added cost of an outside host PLC.
- Creation, monitoring and debugging of ladder-logic programming with powerful programming support software TCPRGOS-W (optional).
- The scan time is 5ms per 1 K-Word (TSL3000). Connection is possible with various programmable controllers and display units etc.

Field Network

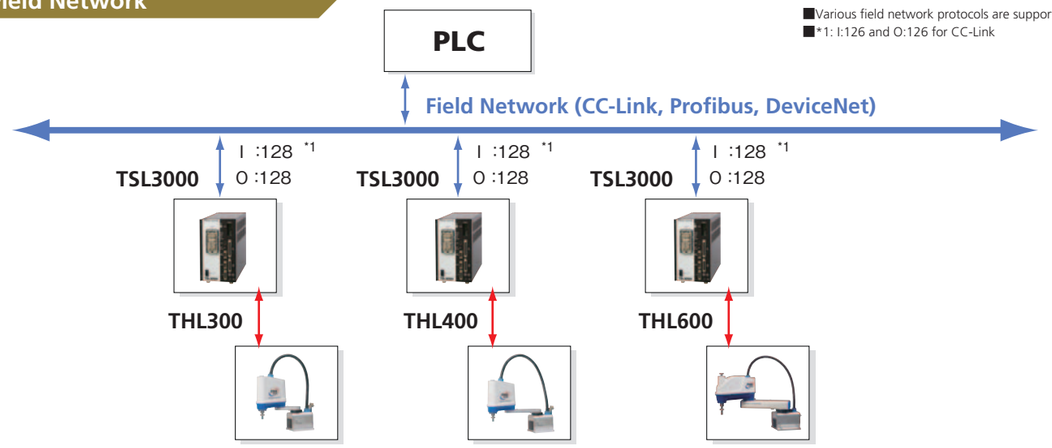

■Various field network protocols are supported.
■*1: I:126 and O:126 for CC-Link

PC Software for Programming Support

The following PC software tools are provided to shorten the time and increase the efficiency of system designing and installation work.

TSPC: For robot programming

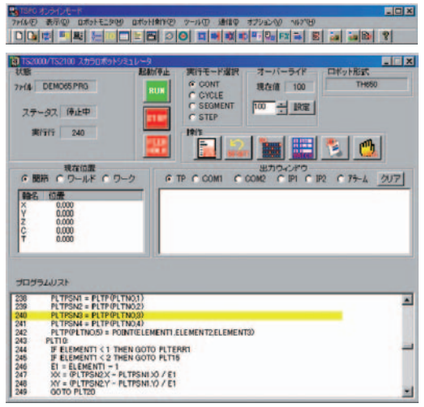

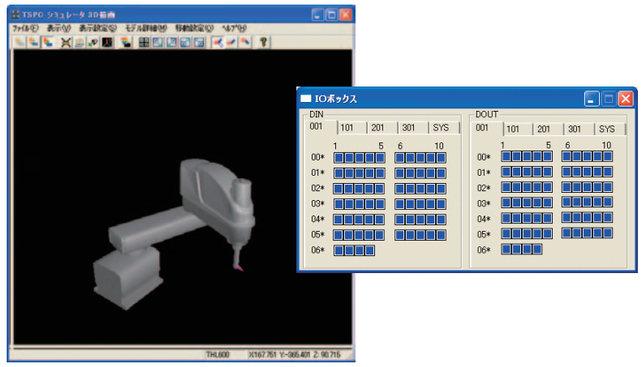

1. **Powerful Simulation Function:**
   Off-line robot program creation and simulation, with simulated I/O. Lead time up to the start of robot operation can be shortened. Robot programs can be pre-checked without stopping the production line.
2. **User-friendly programming environment:**
   Extensive help information, powerful grammar check, direct, online editing of programs in the controller memory.
3. **Multi-functional monitor and support:**
   Monitoring functions such as active program display, position display, motion status monitor by 3D model, and alarm history display. Operation from on-screen operation panel. Connection via Ethernet (optional) is also supported.

TS LayOut: For cycle-time and lay-out review

1. **Instant cycle time estimation:**
   Cycle time is calculated just by pointing at a position, without using the programming language.
2. **Guidance for high-speed motions:**
   Coloured speed map display indicates fast-motion areas from a given start position, guiding you to make the best system layout.
3. **Conversion to robot program:**
   Input positions data can be converted to a robot program just by one click on a menu.

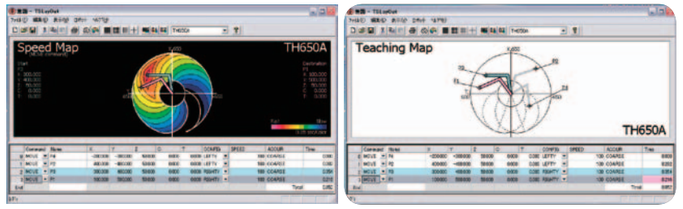

TCPRGOS: For programming the built-in PLC
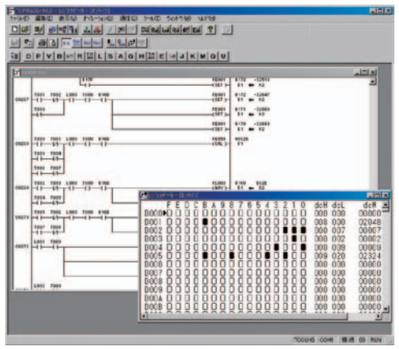
1. Ladder-style logic programming for the built-in PLC.
2. In addition to program creation, on-line monitoring of ladder program and I/O status help reduce development and debugging time.
3. Extensive functions such as address map display, comment display and search functions are provided.